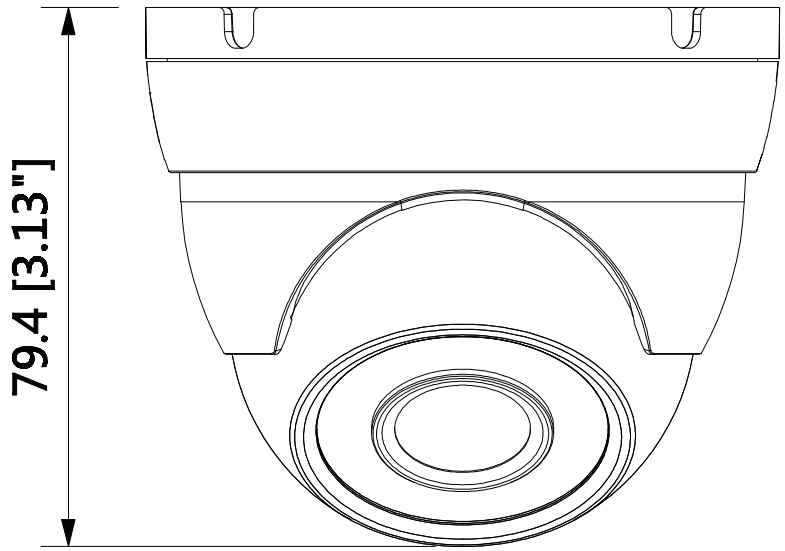
79.4 [3.13"]

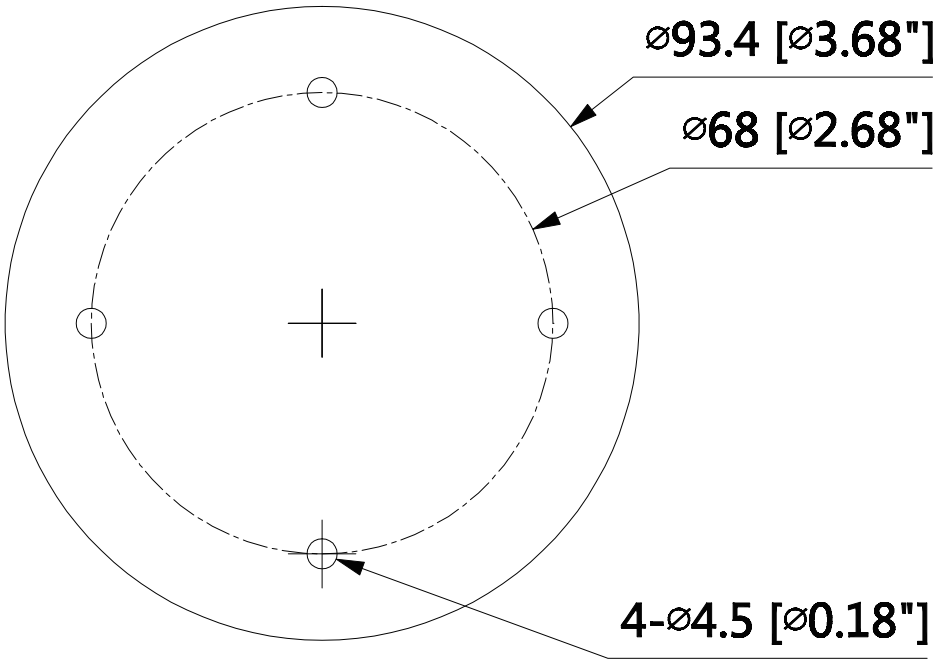
⌀93.4 [⌀3.68"]
⌀68 [⌀2.68"]
4-⌀4.5 [⌀0.18"]