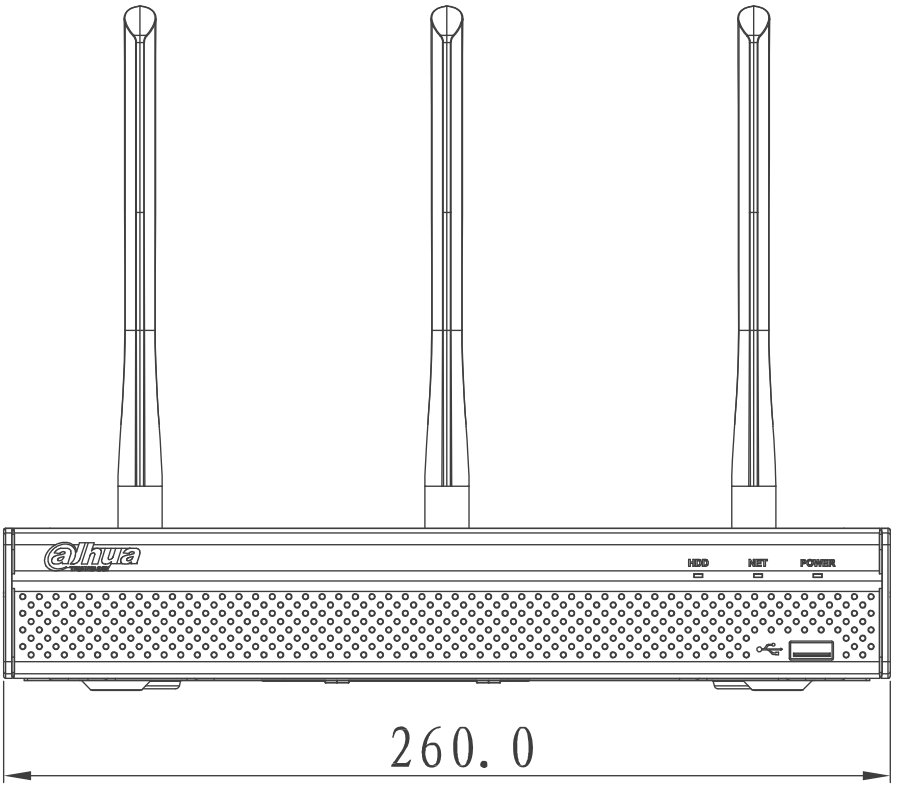
HDD
NET
POWER
260.0

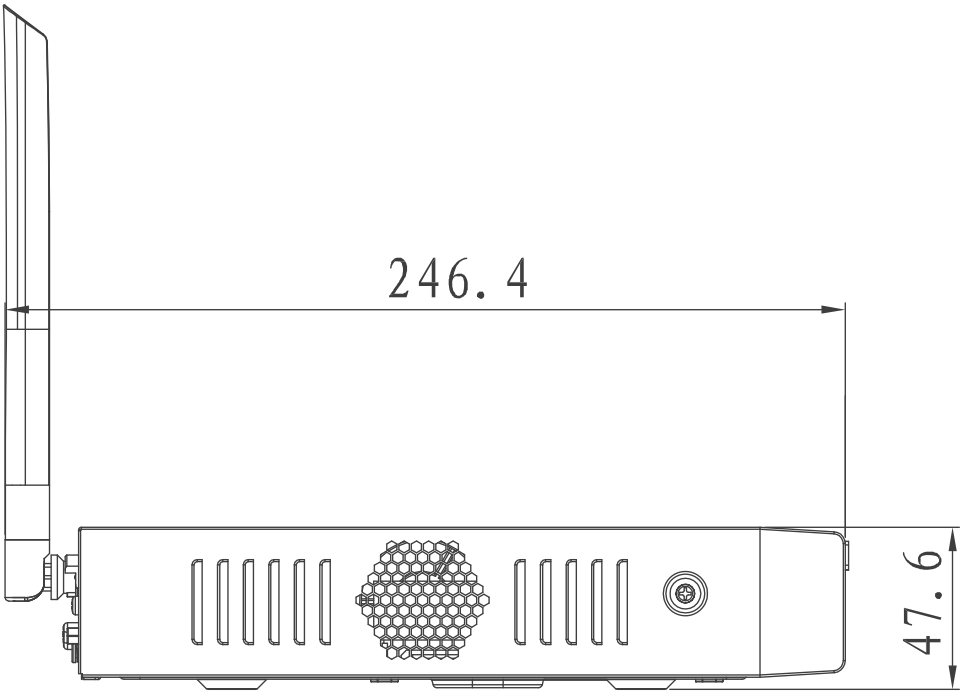
246.4
47.6