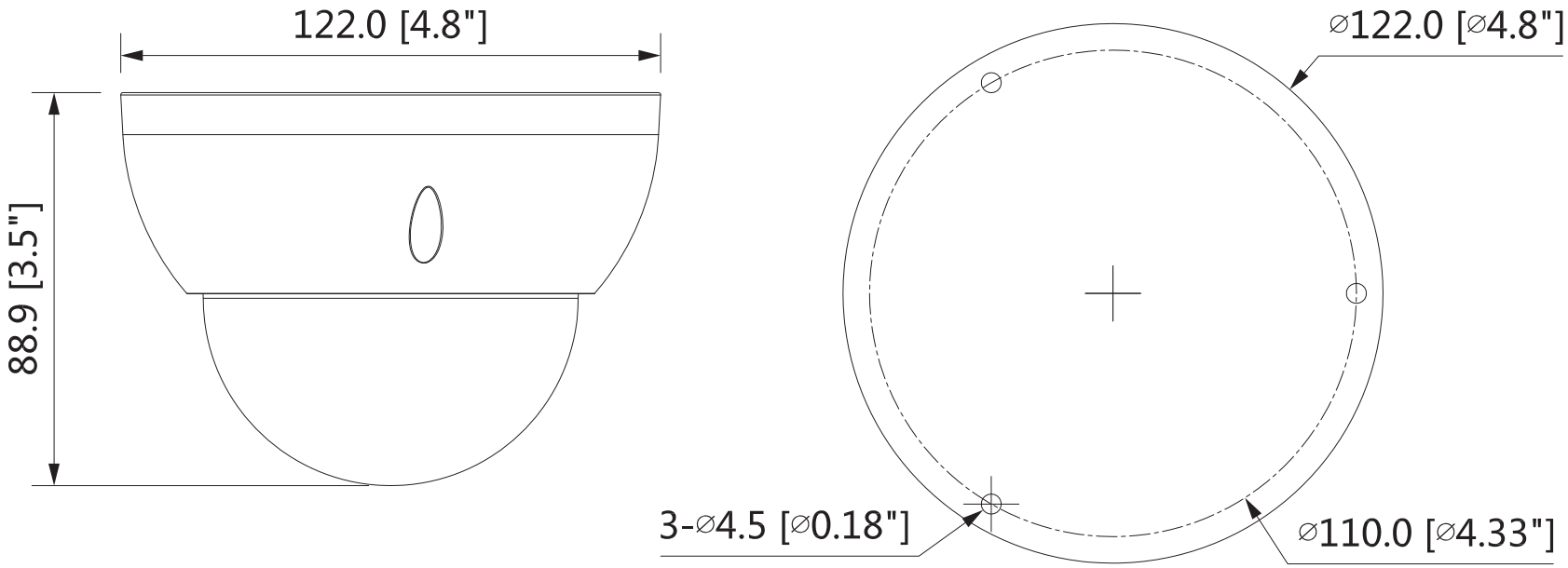
122.0 [4.8"]
88.9 [3.5"]
⌀122.0 [⌀4.8"]
3-⌀4.5 [⌀0.18"]
⌀110.0 [⌀4.33"]